DRAWING NUMBER H500110-3-760-E-DE-0082-01-00ST

DO NOT SCALE - IF IN DOUBT, ASK

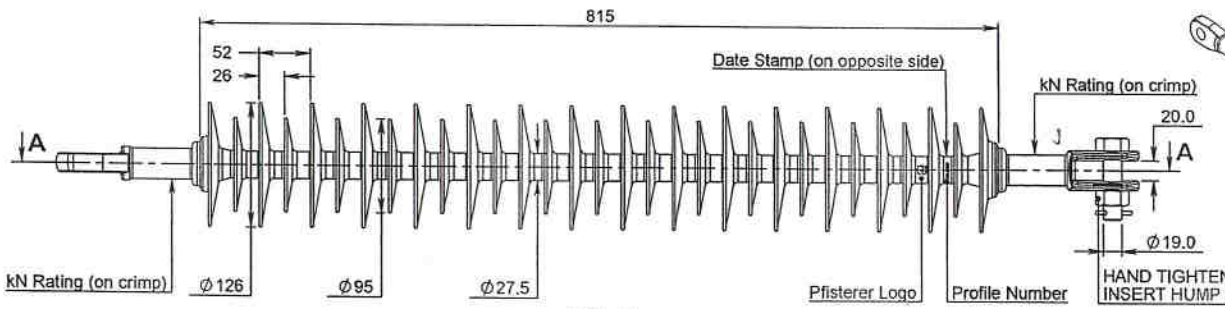

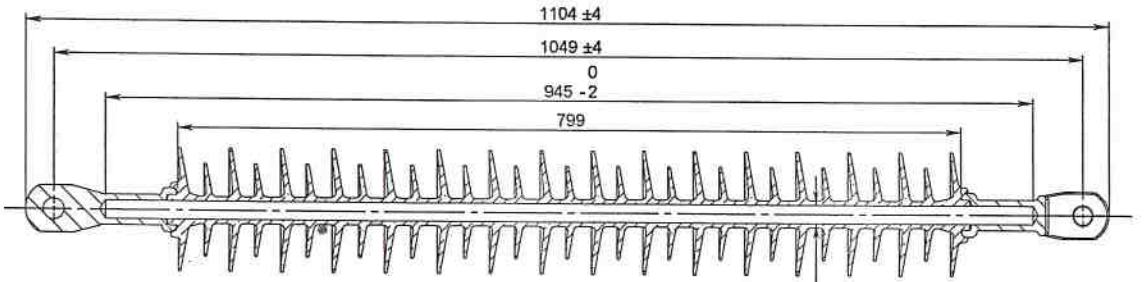

Section A-A

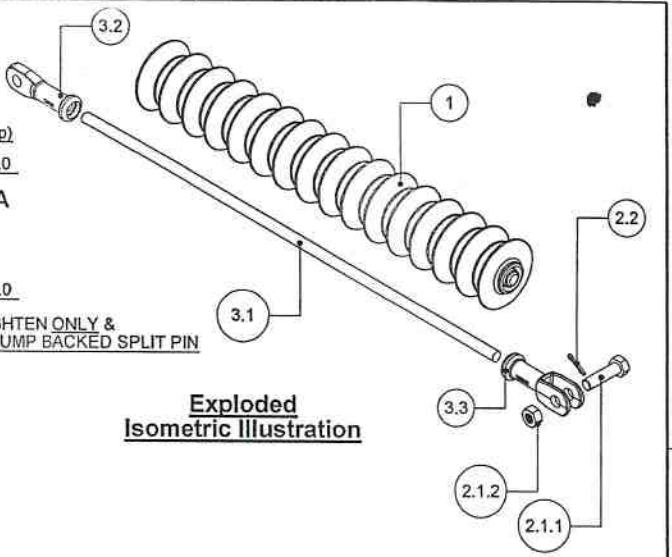

Exploded Isometric Illustration

Product Material Properties:

Completed Product Mass = 4528g
SIL Mass = 2420g
Rod Length = Ø18.57 x 945mm

Bill Of Material

Item No.	Qty.	Drawing No.	Description	Stockcode	Material	Finish	Rawmaterial
1	1	N/A	88kV Long Rod HASDI 480/3100 Shed Profile	N/A	HTV Silicone	N/A	HTV Silicone
2	1	144 017-045	3/4" Bolt,Nut & R-Clip Sub-Assy	144 017-045	N/A	N/A	N/A
2.1	1	144 017-042	3/4" x 70mm Bolt + Nut Assembly	144 017-042	See Below	N/A	N/A
2.1.1	1	144 017-043	3/4" x 70mm Bolt with Ø6mm Hole	144 017-043	H.T. Steel (Grade 8.8)	Hot Dip Galvanized	N/A
2.1.2	1	144 017-044	3/4" NUT	144 017-044	H.T. Steel (Grade 8.8)	Hot Dip Galvanized	N/A
2.2	1	HAQC 167 002	5mm S/S Hump Back Split Pin	HUMP BACK S/PIN	Stainless Steel : Grade 304	N/A	N/A
3	1	144 023RF-005	HASDI 480/3100 Rod & End Fitting Sub-assembly	144 023RF-005	Refer To Bill Of Materials	N/A	N/A
3.1	1	144 033-005	88kV 120kN PGF Rod Ø18.57 x 945mm	144 033-005	Pultruded Glass Fibre Rod, Epoxy E-cr Glass 18.57 x 945	N/A	N/A
3.2	1	144 033-010	19L Tongue - 120kN Partial Overmould	144 033-010	EN8, as forged	Hot Dip Galvanized	N/A
3.3	1	144 033-011	19L Clevis (Ø19mm) - 120kN Partial Overmould	144 033-011	EN8, as Forged	Hot Dip Galvanized	N/A

Insulator Markings:

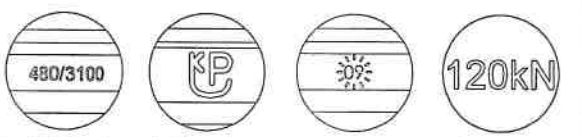

Profile Number | Pfisterer Logo | Date Stamp | kN Rating

NOTES:

NO.	DESCRIPTION	BY	CHK'D	APP'D	DATE
0	ISSUE FOR CONSTRUCTION	ASN	BOB	SEC	09/08/17

REVISIONS / ISSUE AUTHORIZATION

This Document including all design and information therein is Confidential Intellectual Property of Transnet and/or HMG JV. Copyright and all other rights are reserved by Transnet and/or HMG JV. This Document may only be used for its intended purpose.

EPCM CONSULTANT: HMG JV

TITLE	NAME	SIGNATURE	DATE
LEAD DES. ENG. ELEC.			
LEAD DES. ENG. STRUCT.			
ENG. MANAGER			
AREA MANAGER			
PROJECT MGR.			

TRANSNET FREIGHT RAIL

DIV.	TITLE	NAME	SIGNATURE	DATE

ORIGINATOR: PFISTERER (PTY) LTD.

TITLE	NAME	SIGNATURE	DATE
DRAWN	A Q NAIDU		09 08 17
CHECKED	B BRIGDEN		09 08 17
APPROVED	S CORCORAN		09 08 17
ENG. MANAGER	B MURRAY		09 08 17

PR.ENG. / PR.TECH.

NAME: DAVE MULLER — DATE 09 08 17

SIGNATURE:

REG. NUMBER:

SCALE : N.T.S — OR AS NOTED — A3

PART NUMBER: 144 023-005

TRANSNET

ORE LINE RAIL EXPANSION PROJECT PHASE 1A/1B

SISHEN SALDANHA FEEDER LINE (TFR)
50kV AC FEEDER LINE SYSTEM
SIL LR INS HASDI 480/3100 c/w 19L TONGUE & CLEVIS (Ø19MM PIN)

PROJECT NUMBER	DV	FBS	DIS	TYPE	DRG. NO.	SHT.	REV.	ID
H500110	3	760	E	DE	0082	01	00	ST

144 023-005 09/08/17 ASN

SIZE:A3 DATE: 09/08/17